FUSION™

FUSIONSOLAR.CO.ZA

4.8kWh Fusion Battery

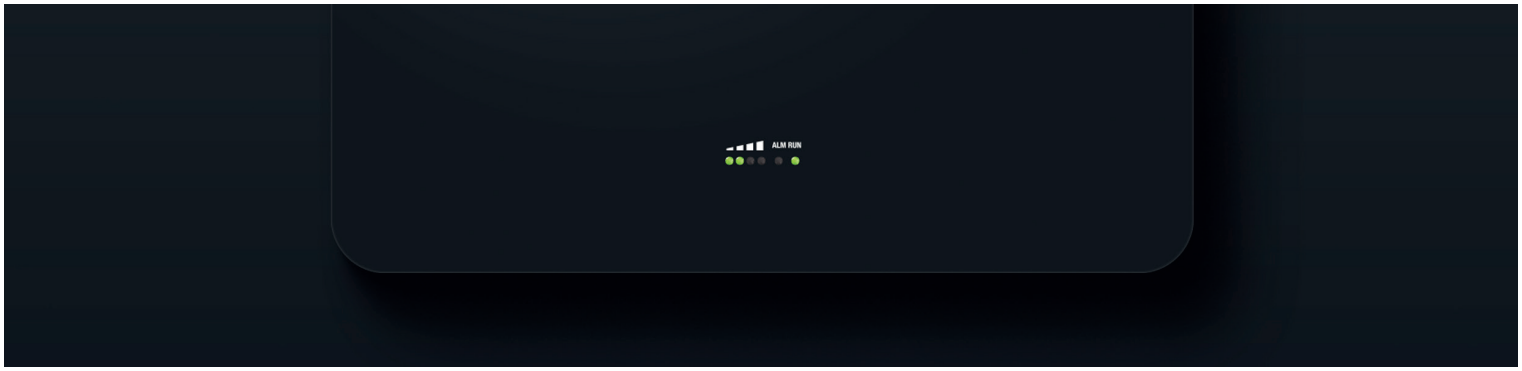

Table of Contents

01 Introduction

This article mainly describes the detailed technical requirements of the 48100 LiFe04 battery pack supplied by Fusion, and clarifies various interface definitions.

Please read the specification carefully before operations and please abide by relevant industrial safety regulations, Fusion will not be responsible for any damage to the product due to improper operations or under conditions that are not prescribed in the specification.

1.1 Purpose of writing

This document provides the parameters of the 4100 LiFe04 battery pack supplied by Fusion and describes in detail how the product works, Facilitate the design, manufacture and inspection of this product by relevant personnel.

1.2 Reference Standard

1.2.1 GB/T 36276-2018 (lithium ion battery for electrical energy storage)

1.2.2 IEC62619-2017 (Secondary cells and batteries containing alkaline or other non-acid electrolytes - safety requirements for secondary lithium cells and batteries, for use in industrial applications)

1.2.3 UN38.3 (Recommendations on the Transport of Dangerous Goods: Manual of Tests and Criteria)

02 Battery Pack Parameters

NO.	ITEMS	GENERAL PARAMETER		REMARK
01	Combination method	15S		
02	Nominal Voltage	48V		
03	Rated Capacity	Typical	100Ah	
		Minimum	100Ah	
04	Energy	4800Wh		
05	Factory Voltage	48~51 V		Mean Operation Voltage
06	Voltage at the end of Discharge	37.5~42 V		Discharge Cut-Off Voltage
07	Voltage at the end of Charge	52.5~55.5 V		Charge Cut-Off Voltage
08	Standard charge	Constant Current 20A Constant Voltage see No.7 0.02CA cut-off		Charge time: Approx 5~6 h
09	Limiting current			BMS Limited (Charge current is ≥100A to open the current limit)
10	Standard discharge	Contant current: 20A end voltage see NO.6		
11	Maximum Continuous Charge Current	100A		50°C≥T≥0°C
12	Maximum Continuous Discharge Current	100A		55°C≥T≥0°C
13	Operation Temperature Range	Charge: 0~55°C		60±25%R.H. No matter what made the battery is in, once the temperature is found to exceed the absolute temperature range, stop charging or discharging immediately.
		Discharge: 20~60°C		
14	Storage Temperature Range	Less than 6 months: -10~35°C		60±25%R.H. at the shipment state
		Less than 3 months: -10~45°C		
		Less than 1 months: -20~55°C		
15	Dimensions (W*D*H)	520*520*167mm		Include case
16	Net Weight	48Kg		Include case
17	Internal Impedance	≥40mΩ		Internal resistance measured at AC 1KHz after 50% charge. The measure must uses the new batteries that within one week after shipment and cyclyes less than 5 times.

03 Battery Management System

The BMS is designed for 15 series lithium battery.
The BMS have all functions which are:

FUNCTION		
Alarm	Cell over-charge voltage	Cell charge low temperature
	Cell over-dicharge voltage	Cell charge over temperature
	Pack over-charge voltage	Cell discharge low temperature
	Pack over-discharge voltage	Cell discharge over temperature
	Over-current charge	Environment low temperature
	Over-current discharge	Environment over temperature
	Mos over temperature	
Protection	Cell over-charge voltage	Cell charge over temperature
	Cell over-dicharge voltage	Cell discharge low temperature
	Pack over-charge voltage	Cell discharge over temperature
	Pack over-discharge voltage	Environment low temperature
	Over-current charge	Environment over temperature
	Over-current discharge	Short circuit
	Mos over temperature	Fault
	Cell charge low temperature	
Others	Cell balance function	
	Communicate function	
	Total capacity function	
	Storage history function	
	Current limiting function	
	Dry limiting function	

04 Battery Pack Structure

This article mainly describes the detailed technical requirements of the 48100 LiFe04 battery pack supplied by Fusion, and clarifies various interface definitions.

Please read the specification carefully before operations and please abide by relevant industrial safety regulations, Fusion will not be responsible for any damage to the product due to improper operations or under conditions that are not prescribed in the specification.

4.1 Appearance

There shall be no such defect as scratch, bur and other mechanical scratch, and the connectir should be no rust dirt, the structure and dimensions see attached drawing of the battery.

4.2 Structure size and outline drawings

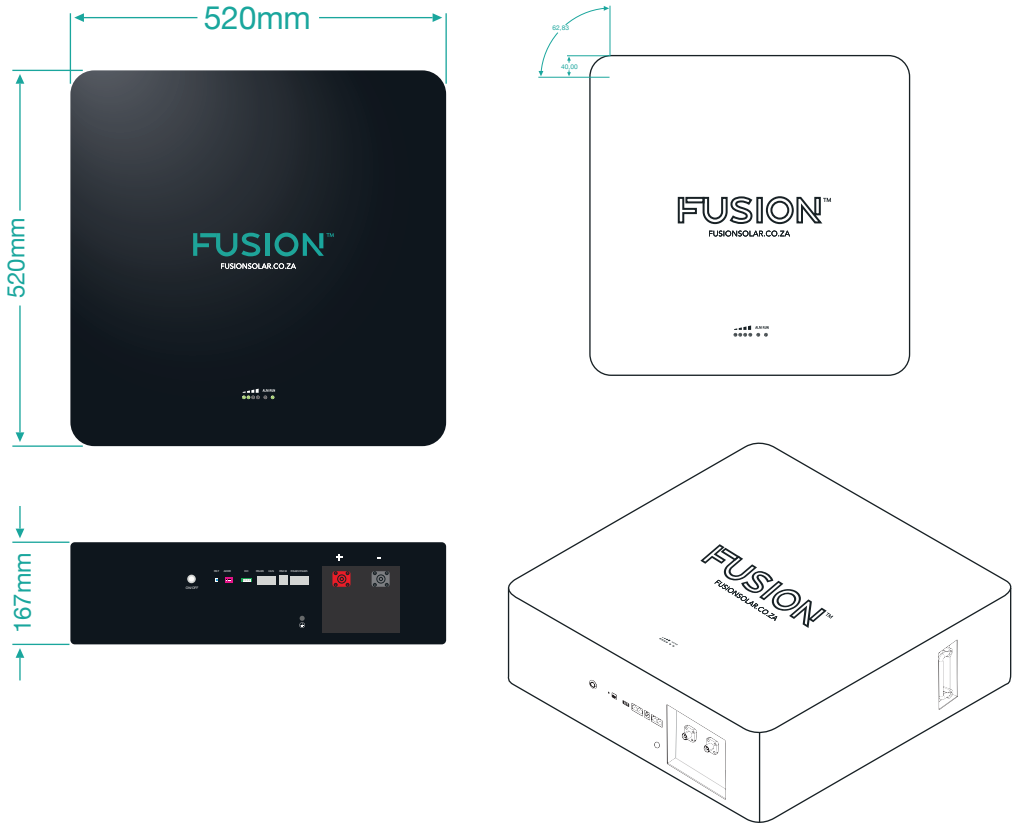

4.3 Panel Interface Definitions

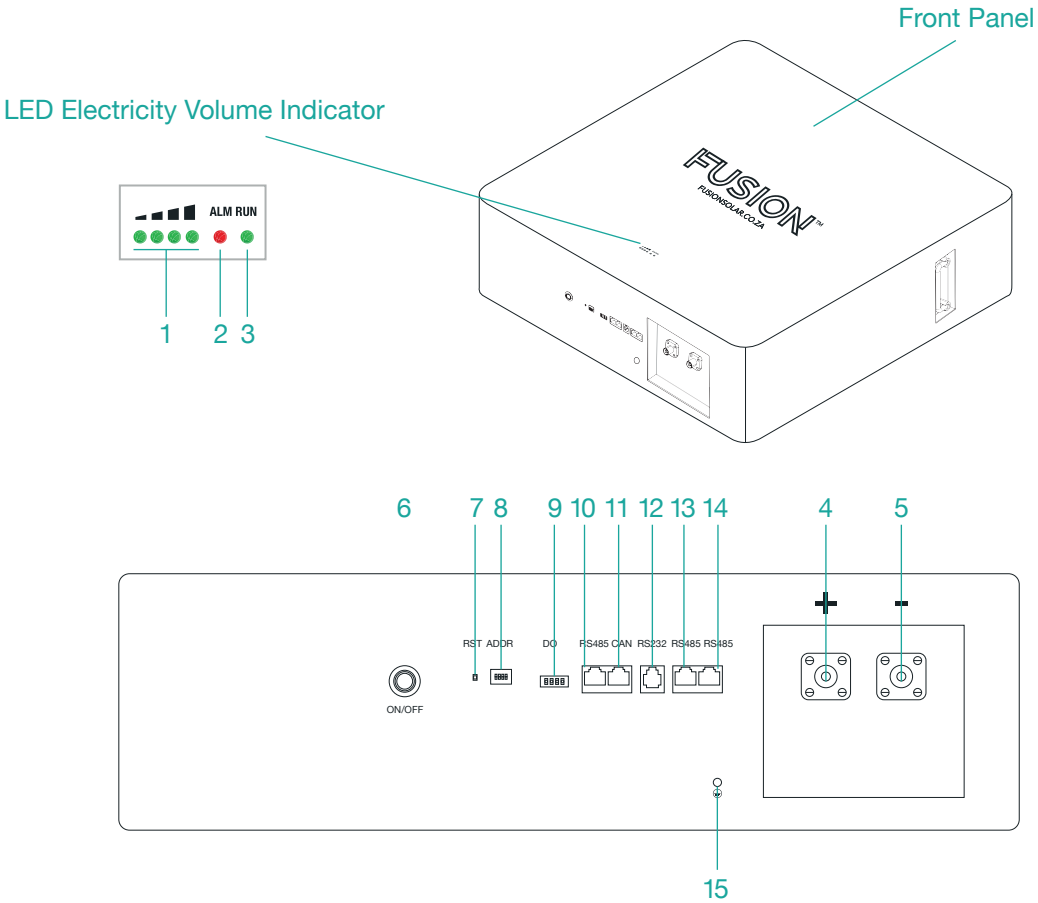

No.	Items	Description
01	Capacity volume indicator	Display the battery's capacity.
02	ALM alarm indicator light	Red-trouble-light on.
03	Working indicator light	Display state information.
04	+ Power terminal	Power cable terminals: one connect to equipment, the other one paralleling to other battery module for capacity expanding.
05	- Power terminal	
06	Power Switch	Turn ON/OFF while battery.
07	Reset Key	Sleep/Activation/Reset.
08	ADS Dialer	4 ADD switches, to definite different address code for each battery module when multiple modules are cascaded, up to 15 addresses.
09	Dry Contact Terminal	1/2 Normally open, closed during fault protection; 3/4 Normally open, closed when a low battery alarm.
10	RS485	RJ45 Port, used to connect to the inverter's RS485 port; Upgrade BMS debug port.
11	CAN	RJ45 Port, used to connect to the inverter's CAN.
12	RS232	RJ45 Port, used to connect to the inverter's RS485 port; Upgrade BMS debug port.
13/14	RS485	RJ45 Port, used communication in parallel, and for battery condition monitoring or manufacturer to debug.
15	Grounding Point	Safety

05 Packaging of Battery

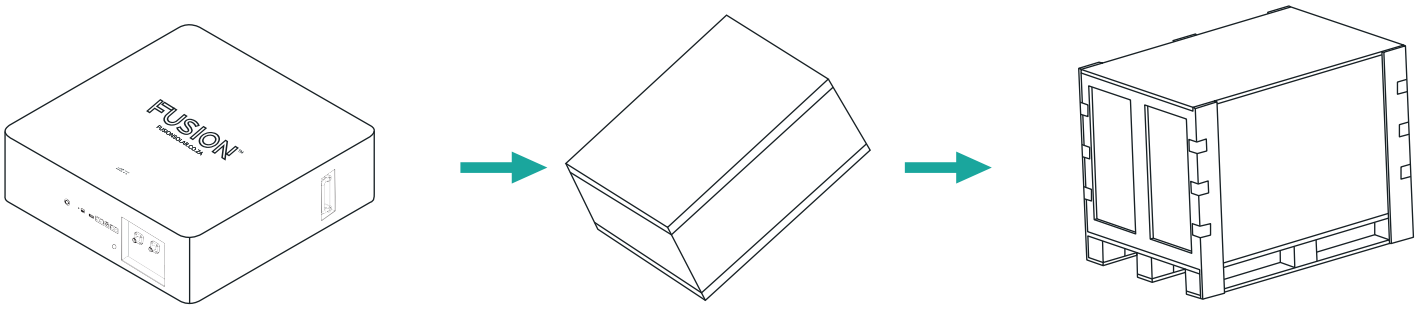

Battery

Battery + Pearl cotton

Battery + Pearl Cotton + Wooden Box

06 Storage, Transportation and Maintenance

6.1 Storage

When the battery pack needs to be stored for a long time, please charge the battery pack to not less than 80% SOC. Place in a dry, ventilated place, and circulate once every three months. The battery pack should be stored in a clean, dry and ventilated place. Avoid contact with corrosive substances and keep away from fire and heat sources.

6.1 Transportation

The battery pack should be packed and transported. During transport, it should be protected from severe vibration, impact or squeeze, and protected from sun and rain. It can be transported by vehicles, trains, ships and other means of transporation.

6.3 Maintenance

a) When the battery pack is stored, it should be stored in not less than 80%SOC.

b) When the battery pack is not used for a long time, it is recommended to charge it once every three months.

c) During the maintenance process, please do not install or remove the battery by yourself, otherwise it will cause the performance of the battery to decease.

07 Safety Instructions

7.1 Danger

- Do not immerse the battery in water or allow it to get wet.
- Do not use or store the battery near sources of heat such as fire or heater.
- Do not use any chargers other than those recommended by Fusion.
- Do not reverse the positive(+) and negative(-) terminals.
- Do not connect the battery directly to wall outlets or car cigarette-lighter sockets.
- Do not put the battery into a fire or apply direct heat to it.
- Do not short-circuit the battery by connecting wires or other metal objects to the positive(+) and negative(-) terminals.
- Do not pierce the battery casing with a nail or other sharp object, break it open with a hammer, or step on it.
- Do not strike, throw or subject the battery to sever physical shock.
- Do not directly solder the battery terminals.
- Do not attempt to disassemble or modify the battery in any way.
- Do not place the battery in a microwave oven or pressurized container.
- Do not use the battery in combination with primary batteries (such as dry-cell batteries) or batteries of different capacity, type or brand.
- Do not use the battery if it gives off an odor, generates heat, becomes discolored or deformed,or appears abnormal in any way. If the battery is in use or being recharged, remove it from the device or charger immediately and discontinue use.

7.2 Caution

- Do not use or store the battery where is exposed to extremely hot, such as under window of a car in direct sunlight in a hot day,Otherwise, the battery may be overheated. This can also reduce battery performance and/or shorten service life.
- If the battery leaks and electrolyte gets in your eyes, do not rub them. Instead, rinse them with clean running water and immediately seek medical attention. If not dealt with in time, electrolyte can cause eye injury.

SolarAdvice

solaradvice.co.za | sales@solaradvice.co.za | 021 012 5336 | facebook/solaradviceza