Geyser wise

intelligent energy control

PV System

installers guide

Models: 2200W AC/950W DC; 1500W AC/950 DC

Before operating and installation, carefully read all instructions. Do not discard this manual.

Index

INTRODUCTION

The system makes use of photovoltaic technology and a unique PTC AC/DC element to heat the water in the geyser. This differs from the traditional thermal hot water systems where water is cycled from a collector through pipes to the hot water cylinder by either making use of a 220V pump, 12V pump or thermo siphoning.

Advantages over thermal hot water systems are as follows:

- Any existing geyser can be converted
- No Additional plumbing is required
- No pumps necessary to circulate water
- No risk of damaged panels in frost prone areas
- The water temperature can be controlled on very hot summer days - reduced risk of overheating problems
- Suitable in all water conditions
- Suitable in areas where the geyser is not situated near the panels
- Modular system – can be expanded to build off-grid power system for the home

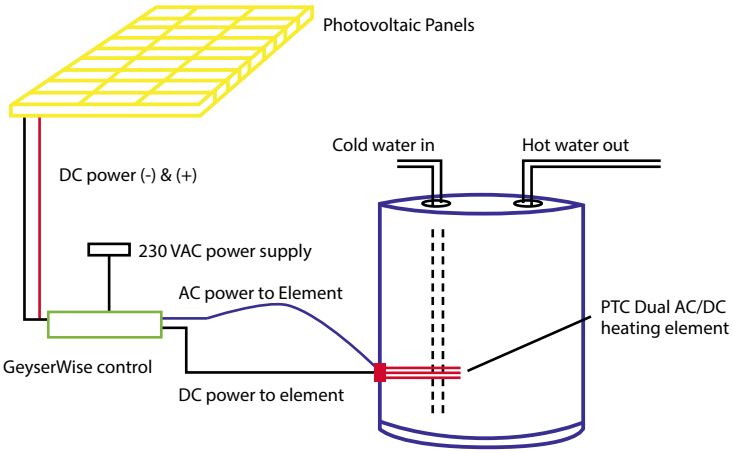

System overview - 100L for high irradiation areas

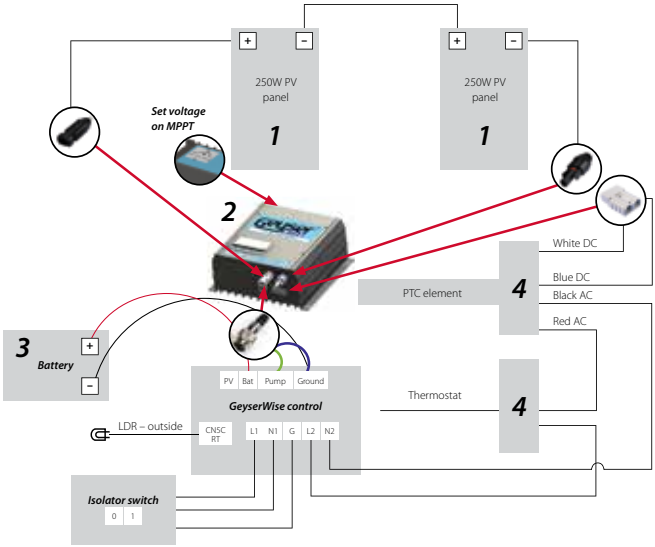

System overview - 100L for low irradiation areas

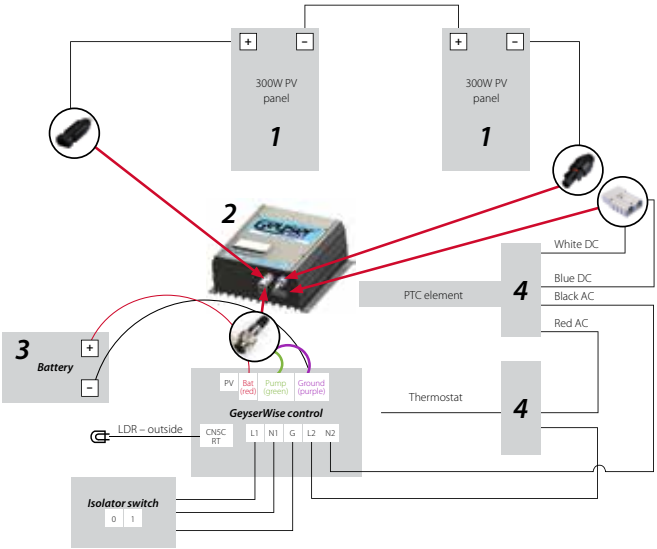

See table on page 5

System overview - 150L for high irradiation areas

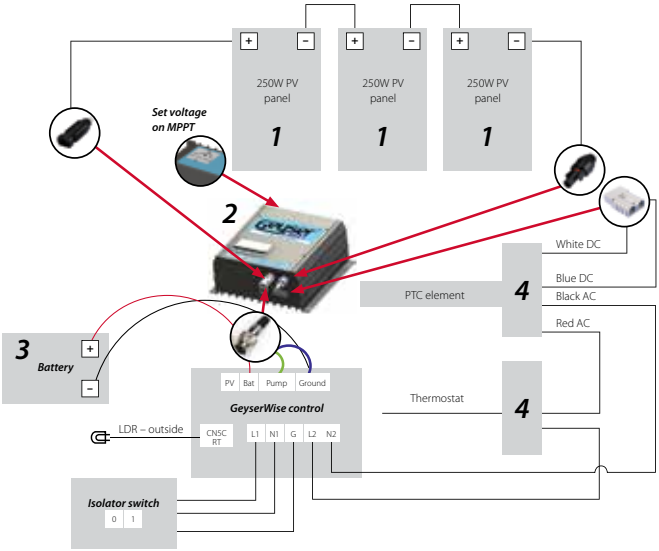

System overview - 150L for low irradiation areas

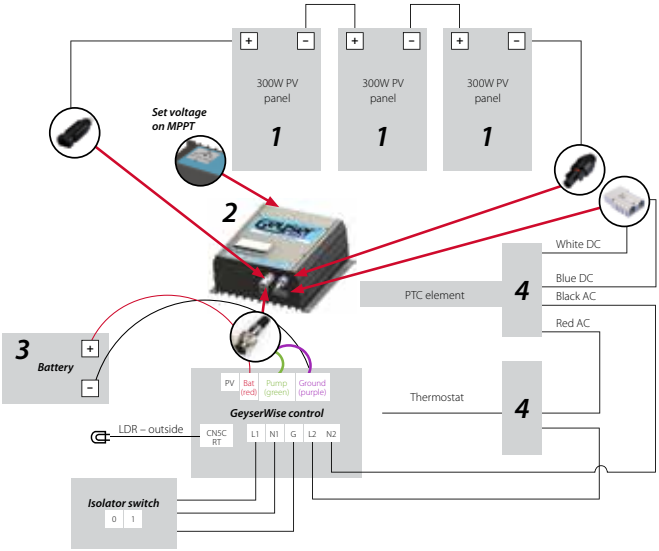

See table on page 5

System overview - 200L for high irradiation areas

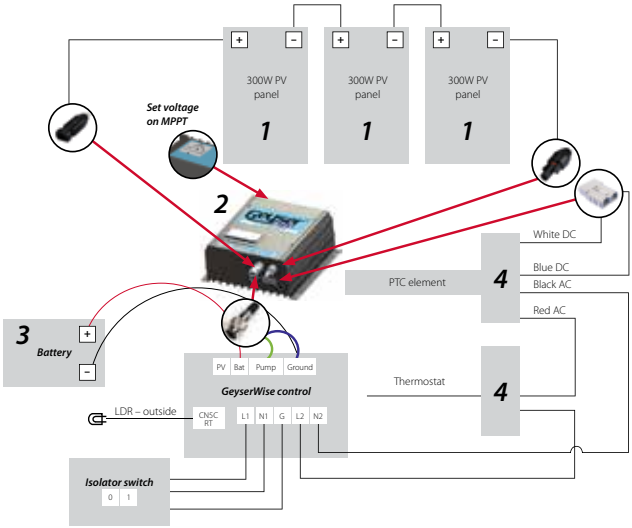

System overview - 200L for low irradiation areas

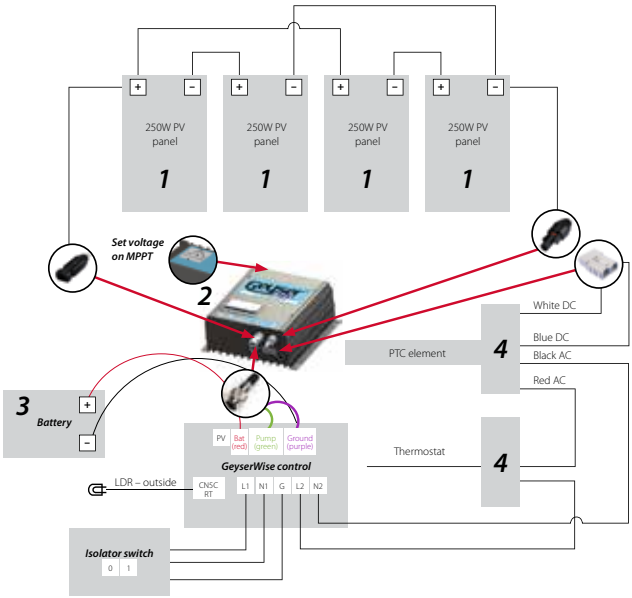

See table on page 5

South African irradiation levels

Please select your system combination according to the area you live in:
For low irradiation areas, please use combination as for low irradiation areas (highlighted in yellow in the table). For high irradiation areas, please use combination as for high irradiation areas (highlighed in green in the table).

Insulation kWh/m2/day												
	JAN	FEB	MAR	APR	MAY	JUN	JUL	AUG	SEP	OCT	NOV	DEC
BELA-BELA	6,44	5,87	5,31	4,72	4,26	3,88	4,18	4,88	5,72	6,02	6,20	6,30
BETHAL	6,66	6,08	5,41	4,76	4,16	3,78	4,03	4,73	5,60	5,94	6,20	6,53
BLOEMFONTEIN	7,02	6,19	5,28	4,44	3,74	3,32	3,54	4,36	5,29	5,97	6,71	7,07
BOTSHABELO	6,90	6,10	5,23	4,44	3,78	3,35	3,57	4,35	5,30	5,82	6,59	6,95
BRITS	6,70	6,10	5,46	4,77	4,21	3,80	4,08	4,78	5,69	5,98	6,29	6,62
CAPE TOWN	7,93	7,02	5,63	4,06	2,91	2,50	2,67	3,41	4,63	6,16	7,44	7,96
DE AAR	7,58	6,60	5,46	4,35	3,54	3,03	3,31	4,20	5,19	6,31	7,19	7,80
DELMAS	6,66	6,08	5,41	4,76	4,16	3,78	4,03	4,73	5,60	5,94	6,20	6,53
DURBAN	5,57	5,18	4,75	4,01	3,41	3,01	3,17	3,72	4,32	4,53	4,83	5,44
EAST LONDON	5,68	5,27	4,44	3,69	3,15	2,70	2,85	3,53	4,29	4,78	5,35	5,74
EMALAHLENI	6,66	6,08	5,41	4,76	4,16	3,78	4,03	4,73	5,60	5,94	6,20	6,53
EMBALENHLE	6,39	5,83	5,19	4,54	3,99	3,66	3,88	4,57	5,43	5,63	6,03	6,28
JOHANNESBURG	6,70	6,10	5,46	4,77	4,21	3,80	4,08	4,78	5,69	5,98	6,29	6,62
KIMBERLEY	7,10	6,30	5,39	4,53	3,79	3,36	3,59	4,45	5,42	6,16	6,91	7,21
KLERKSDORP	6,55	5,92	5,24	4,58	4,04	3,64	3,92	4,67	5,57	5,86	6,36	6,57
MIDDELBURG	6,66	6,08	5,41	4,76	4,16	3,78	4,03	4,73	5,60	5,94	6,20	6,53
MOKOPANE	6,45	5,98	5,32	4,75	4,22	3,83	4,11	4,81	5,62	5,87	6,11	6,34
ORKNEY	6,55	5,92	5,24	4,58	4,04	3,64	3,92	4,67	5,57	5,86	6,36	6,57
PHALABORWA	6,10	5,69	5,07	4,51	4,00	3,60	3,77	4,47	5,16	5,28	5,72	6,00
POLOKWANE	6,45	5,98	5,32	4,75	4,22	3,83	4,11	4,81	5,62	5,87	6,11	6,34
PORT ELIZABETH	6,41	5,68	4,63	3,63	2,97	2,50	2,71	3,39	4,29	5,07	5,91	6,55
POTCHEFSTROOM	6,55	5,92	5,24	4,58	4,04	3,64	3,92	4,67	5,57	5,86	6,36	6,57
PRETORIA	6,70	6,10	5,46	4,77	4,21	3,80	4,08	4,78	5,69	5,98	6,29	6,62
RUSTENBURG	6,68	5,99	5,40	4,74	4,21	3,79	4,09	4,82	5,71	6,01	6,38	6,63
SOWETO	6,70	6,10	5,46	4,77	4,21	3,80	4,08	4,78	5,69	5,98	6,29	6,62
STILFONTEIN	6,55	5,92	5,24	4,58	4,04	3,64	3,92	4,67	5,57	5,86	6,36	6,57
UPINGTON	7,71	6,86	5,68	4,50	3,78	3,34	3,57	4,43	5,40	6,69	7,46	7,98
VIRGINIA	6,78	6,12	5,24	4,49	3,88	3,45	3,71	4,45	5,39	5,77	6,35	6,71
WELKOM	6,78	6,12	5,24	4,49	3,88	3,45	3,71	4,45	5,39	5,77	6,35	6,71

System components

PV Panels
(number and size depends on the system configuration)

PTC Element
1500W AC, 900W DC or 2200W AC, 900WDC. Screwboss or Flangemount available.

12V 4Ah Battery

MPPT

Geyserwise Dual Controller

INSTALLATION TOOLS REQUIRED

- AC/DC Clamp meter
- Screwdriver set
- Socket Set
- Crimping Tool
- 4mm Black and Red Solar Flex Cable

INSTALLATION STEPS SUMMARY

Step 1 Read this manual thoroughly. In case of any ambiguities, contact our office for further advice
Step 2 Always ensure familiarity with all local safety procedures
Step 3 Mount the PV Panels
Step 4 Install element
Step 5 Install Geyserwise Dual Controller
Step 6 Install MPPT
Step 7 Recheck all connections
Step 9 Switch on Fuses on MPPT

SAFETY PRECAUTIONS

Observe all precautions as set out in SANS 10142 when working with electricity.

Electricity on the geyser

An installer should always take precautions when working with electricity. The most important precautions to perform **before** doing maintenance on a geyser are:

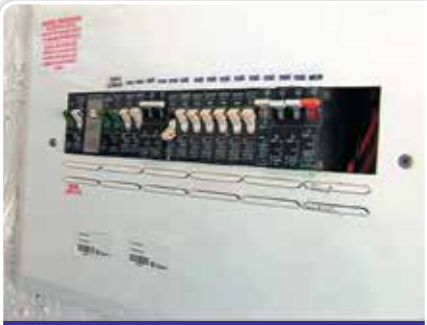

Switch off the circuit breaker of the geyser at the main DB. This is done to ensure that there is no power supply to the geyser

Switch off the isolator switch in the roof. The isolator switch acts as a switch to isolate both the live an neutral from the main supply should someone accidentally switch on the main supply or the circuit breaker fails

Test with a MULTIMETER to ensure that there is no current on the wires. IMPORTANT Make sure that there is no reading on the multimeter.

Electricity on PV Panels

PV modules can produce current and voltage when exposed to light of any intensity. Electrical current increases with higher light intensity. DC voltage of 30 Volts or higher is potentially lethal. Contacting the live circuitry of a PV system operating under light can result in lethal electric shock. De-energize PV modules by removing them entirely from light or by covering their front surface with an opaque material. Regard the safety regulations for live electrical equipment when working with modules that are exposed to any light. Use insulated tools and do not wear metallic jewellery while working with PV modules.

In order to avoid arcing and electrical shock, do not disconnect electrical connections under load. Faulty connections can also result in arcing and electrical shock. Keep connectors dry and clean, and ensure that they are in proper working condition. Never insert metallic objects into the connectors, or modify them in any way in order to secure an electrical connection.

Do not touch or handle PV modules with broken glass, separated frames or a damaged backsheet unless the PV modules are first disconnected and you are wearing proper Protective clothing. Avoid handling PV modules when they are wet. Never touch electrical connections that are wet without protecting yourself with insulated gloves.

Make sure the fuses on the MPPT are in the off position when making any connections

Mounting of PV Panels

Rooftop PV systems should only be installed on dwellings that have been formally analysed for structural integrity, and confirmed to be capable of handling the additional weighted load of PV system components, including PV modules, by a certified building specialist or engineer.

For your safety, do not attempt to work on a rooftop until safety precautions have been identified and taken, including without limitation fall protection measures, ladders or stairways, and personal protective equipment.

For your safety, do not install or handle PV modules under adverse conditions, including without limitation strong or gusty winds, and wet or frosted roof surfaces.

INSTALLATION OF THE PV PANELS

Each manufacturer of PV panels will make available instructions as to how best to install its PV panels. Be sure to read and follow instructions on the specific brand of PV panels used in the system. The below information is based on information as contained in the guidance notes of Renesola PV panels.

General

- Do not dismantle the Modules or tear up any labels.
- Installation should be done by qualified professionals only.
- Ensure that the correct connector pairs are used.
- Do not touch the exposed cables or connectors.
- De-energize PV modules by removing them entirely from light or by covering their front surface with an opaque material.
- System designers shall design an appropriate bracket and follow the instructions to fix the PV module to the bracket.
- Installation and maintenance shall be performed in accordance to all electrical safety regulations
- Do not stand on the modules
- Do not paint the modules or spray any material on the modules
- Always transport the modules carefully and according to the manufacturer's instructions. Take care that the modules are not scratched as scratches may influence the efficiency of the modules

Installation

STEP1

Choose the location of the PV panels - be sure to choose a location where the panels will be fully exposed to the sun and that the areas are not shaded. Look out for shade produced by trees or other buildings. In the Southern Hemisphere the panels should face north at an angle calculated according to your location

Optimal angle for fixed solar panels depending on installation position

- for a latitude up to 25° take your latitude and multiply it by 0,87
- for a latitude between 25° to 50° take your latitude multiply by 0,87 after that you will add 3,1 degrees
- for a latitude over 50° the most ideal angle will end up being approximately 45° degrees

As you can see you will need to know your current latitude to be able to count out the most ideal angle to position your solar panels in. The easiest way to do this is to do a search for your location on Google maps and then right click on the location and choose "what is here". A green arrow will then appear, if you click on that arrow you will get the GPS coordinates for that spot on the map. The first numbers is the latitude of the spot. Use that number in your calculations. For example GPS coordinates for Goodwood, Cape Town is given below.

100 Townsend St
Cape Town 7460
-33.906552, 18.540870

STEP 2
Use a bracket structure that can withstand high winds. The bracket structure must be made of durable, corrosion resistant and UV resistant materials

STEP 3
Choose a fixing method:

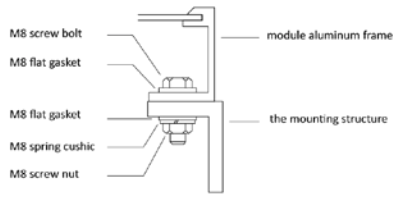

Installed by nut and bolt:

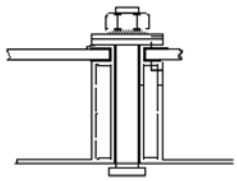

Installed by fixture

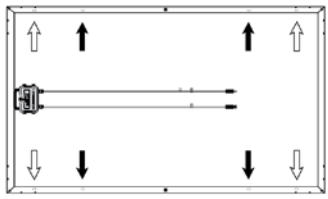

Fix the module to the structure using the pre-fabricated holes

STEP 4
Grounding

Negative system grounding is recommended
The ground wire shall be bare copper wire with no insulation sleeve. Wire cable with cross sectional area of 4mm2 to 6mm2 is recommended and ground clamp is recommended (See picture)

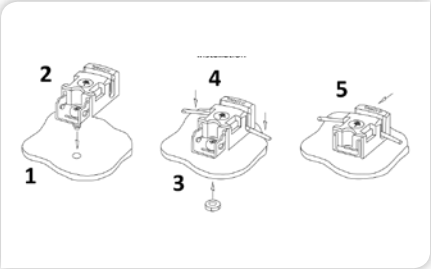

STEP 5
Wiring and connection

- Use 4mm or 6mm cable depending on distance of panels from the MPPT. 4mm for up to 20m. For longer distances use 6mm Cable
- Ensure that the correct connecters are used (At least 40 A)

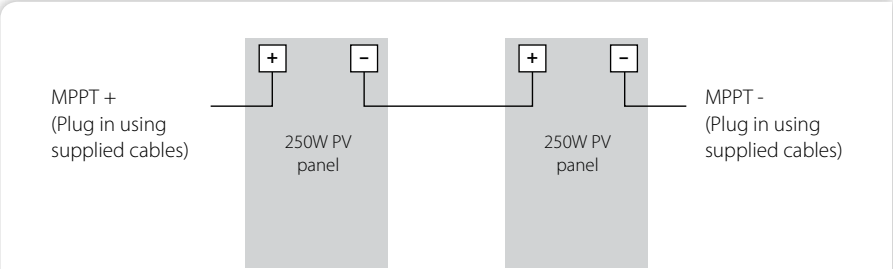

PV system connection diagramme – Two panels seriers MPPT

INSTALLATION OF THE ELEMENT

The element is a universal screwboss element suitable for geysers that are fitted with a screw-in element. Please note that a separate flange must be purchased to accommodate for the thermostat. Each brand of geyser has its own unique flange.

Screw in elements

Tools needed:

- Phillips screwdriver
- Screw-in element wrench
- Your new element
- Garden hose
- Multi meter or circuit tester (to make sure power is off)

Installation steps

Be sure to use the same wattage, voltage, and flange style as your previous element.

1	Shut OFF electric power to water heater. See safety steps on page 6
2	Shut OFF cold water supply to the geyser, open the hot water faucet, attach a hose to the drain valve, open the drain valve on the GEYSER and drain the water.
3	Remove access cover and fold back insulation.
4	Remove plastic terminal protector.
5	Check wires with a Multi Meter before attempting to remove the wires. 
6	Disconnect electric wires from element
7	Remove element using screw-in element wrench
8	Clean gasket area and threads
9	Install gasket on element
10	Close drain valve and turn ON cold water supply.
11	Allow all trapped air to escape from open hot water faucet until water has a constant flow, then close hot water faucet. If leakage occurs, shut OFF cold water supply and tighten element or reposition gasket.

12	Inspect wiring. If corrosion is present on wiring, cut and strip wire 1/2" (only if wire is long enough). If corrosion is still present, or wire is not long enough consult electrician for wire replacement and wire gauge selection. Loose, corroded or faulty wiring connections can cause heat build-up or fire at wiring terminals.
13	Connect electric wires to element. Tighten screws.
14	Replace plastic terminal protector.
15	Replace insulation and access cover. Tank must be properly filled with water and free of air before applying electric power to prevent element damage.
16	Turn ON electric power to water heater.

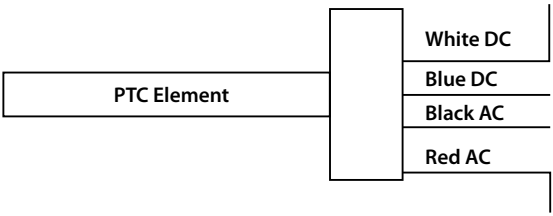

Flange Type Elements

Tools needed:

- Phillips screwdriver
- Socket wrench
- Your new element
- Garden hose
- Volt meter or circuit tester (to make sure power if off)

Be sure to use the same wattage, voltage, and flange style as your previous element.

1	Shut OFF electric power to water heater. See safety steps on page 6	
2	Shut OFF cold water supply to the geyser, open the hot water faucet, attach a hose to the drain valve, open the drain valve on the GEYSER and drain the water.	
3	Remove access cover and fold back insulation.	
4	Check wires with a Multi Meter before attempting to remove the wires.	

5	Disconnect electric wires from element
6	Remove element mounting bolts using socket wrench. Note position of thermostat bracket to be reinstalled later.
7	Clean gasket area in tank
8	Install gasket into recess in tank.
9	Install element and thermostat bracket. Tighten bolts in diagonal pattern.
10	Close drain valve and turn ON cold water supply.
11	Allow all trapped air to escape from open hot water faucet until water has a constant flow. Close hot water faucet.
12	Inspect wiring. If corrosion is present on wiring, cut and strip wire 1/2" (Only if wire is long enough). If corrosion is still present, or wire is not long enough consult electrician for wire replacement and wire gauge selection. Loose, corroded or faulty wiring connections can cause heat buildup or fire at wiring terminals.
13	Connect electric wires to element. Tighten screws
14	Replace plastic terminal protector
15	Replace insulation and access cover
16	Tank must be properly filled with water and free of air before applying electric power to prevent element damage.
17	Turn ON electric power to water heater

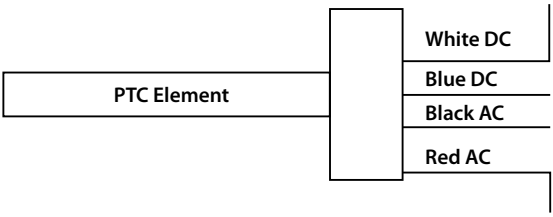

Simply Plug in the Anderson plug on fitted on the White and Blue cables into the MPPT

Installation procedure steps

A summary of the installation steps are as follows:

1. Apply all safety measures.
2. Install the control box.
3. Install the display unit.
4. Remove existing thermostat and replace with new supplied thermostat.
5. Install LDR sensor.
6. Complete all electrical connections.
7. Set up the controller and all settings.

STEP 1: Apply all safety measures

An installer should always take precautions when working with electricity.
The most important safety precautions to perform BEFORE doing any maintenance on a geyser are:

1

Switch off circuit breaker of geyser at main DB. This is done to ensure that there is no power supply to the geyser.

2

Switch off isolator switch in the roof. The isolator switch acts as a switch to isolate both live and neutral from the main supply should someone accidentally switch on the main supply or the circuit breaker fails.

3

Test with a MULTIMETER to ensure that there is no current on the wires. **IMPORTANT!** Make sure that there is no reading on the multimeter.

STEP 2: Install control box

Find a dry place near the isolator switch. **The control box must not be exposed to the elements!**

STEP 3: Install the display unit

The display unit must be installed in a location that is accessible to the end user, but not in reach of children that might want to play with it.

The display unit provides valuable information on the functionality and status of your hot water system.

Draw the display unit cable from the unit to the control box. Plug it into the three pin plug as provided on the control box. It can only fit into one plug.

The standard display cable of 5m is supplied. Extension cables are available on request from our offices. A maximum extension of 20m is recommended.

Only use GeyserWise extention cables for extensions!!!

STEP 4: Remove thermostat and replace with supplied geyser temperature probe

The geyser's thermostat needs to be removed. The geyser temperature probe provided by GeyserWise has a built in probe that measures the temperature in the geyser. It also supplies information to the element whether it should switch on or not.

The GeyserWise geyser temperature probe incorporates a thermal cut out to prevent electrical overheating. The live feed to the element will be broken at temperatures above 90°C. When the cut out switches off, it needs to be reset manually by pressing the red button on the thermal cut out.

1

Remove the existing thermostat by disconnecting all the wires on the connector terminal block of the thermostat.

2

Replace the conventional element with the GeyserWise AC/DC element as per the AC/DC element instruction manual and the wiring diagram on page 5.

3

Ensure that you insert the geyser temperature probe into the correct pocket.

4

Insert the new geyser temperature probe and connect the live wires once again on the connector terminal block.

5

Plug the DC part of the element into the MPPT Connector Cable as supplied

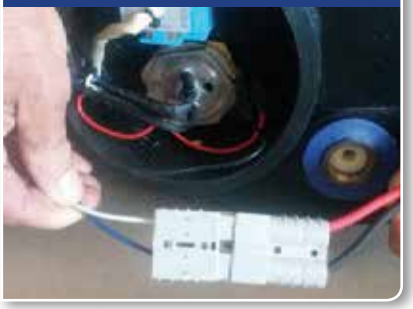

6

Push the plug connected to the geyser temperature probe through the hole as provided on the geyser.

Plug it into the dedicated plug as provided on the control unit.

STEP 5: Install the LDR sensor

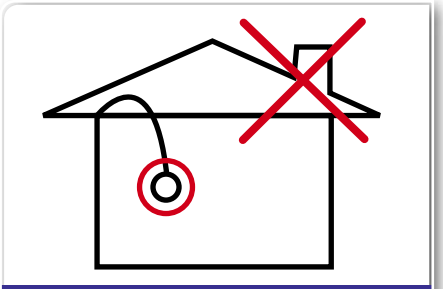

Do not install inside.

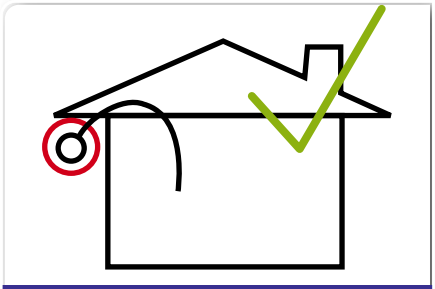

Install outside.

The function of the LDR sensor is to detect the quality of light outside.

You will be supplied with an extension cable. Do not use any other extension than the extension cable provided.

Plug the LDR sensor into the control box at the dedicated port.

Connections on control box summary

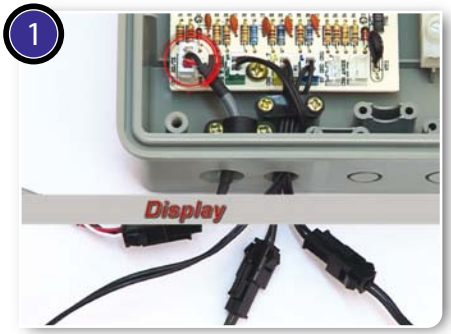

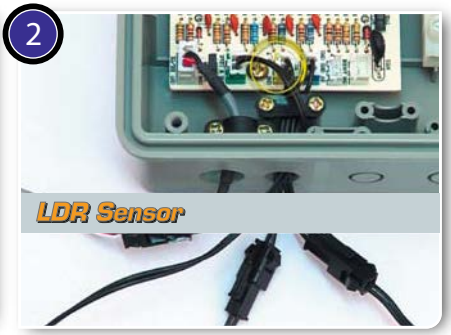

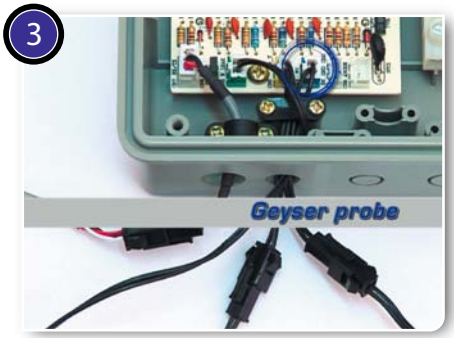

STEP 6: Complete all electrical connections

The hard wiring of a controller is critical.

Main power supply
The main power supply is provided from the isolator switch.

- The **Red** wire is your **Live** wire.
- The **Black** wire is your **Neutral**.
- The other wire provided is your **Earth**.

Each control box has knock outs at the bottom of the unit. To make an entry into the control box, just remove the knock out.

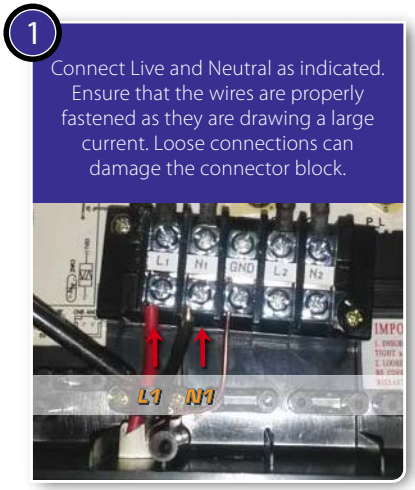

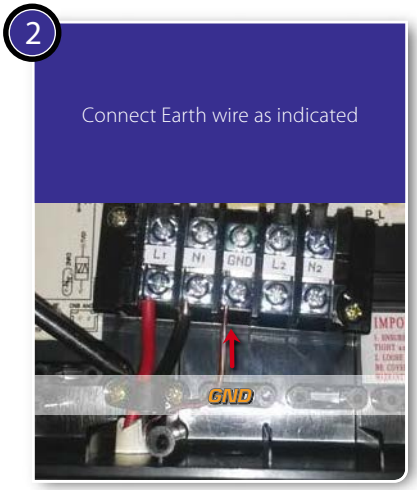

3

Fasten all connections with the cord grip and screws as indicated to ensure that the wire cannot be moved.

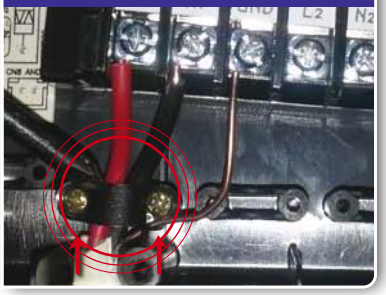

Connect wire between controller and geyser

Note: Ensure that a wire is used that complies with the requirements of SANS 10142.

1

Connect Live and Neutral as indicated. Ensure that the wires are properly fastened as they are drawing a large current. Loose connections can damage the connector block.

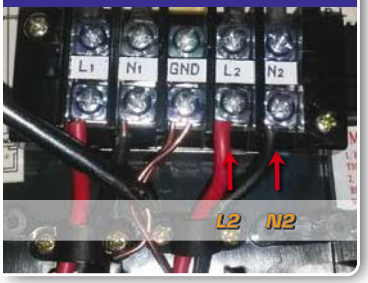

2

Connect Earth wire as indicated.

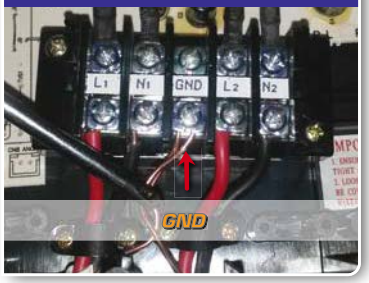

3

Fasten all connections with the cord grip and screws as indicated to ensure that the wire cannot be moved.

4

Connect wires to geyser's connector block.

5

Ensure the geyser is earthed as indicated (in case the geyser needs to be earthed).

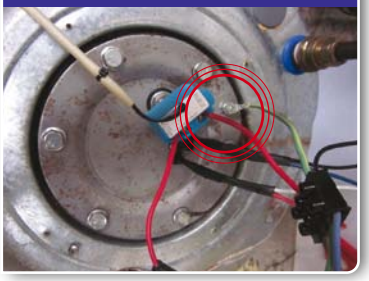

6

Replace cover of geyser to protect the electrics.

MPPT CONNECTION

Connect MPPT positive to DC pump and negative to ground.
Connect positive to DC pump and negative to ground.

1 MPPT Positive

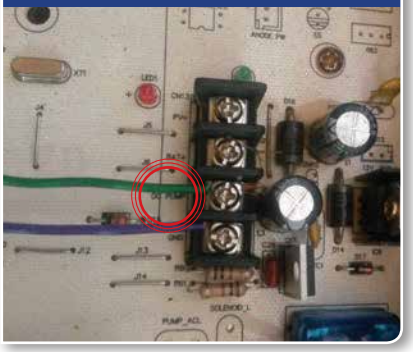

2 MPPT Negative

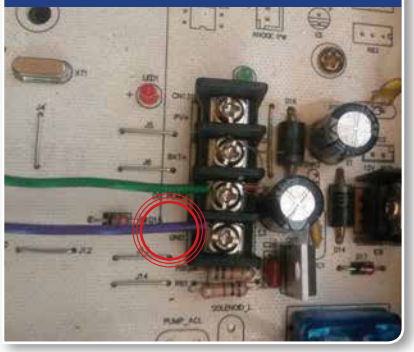

3 Plug MPPT connector cable into the MPPT

Replace lid on control box and fasten properly.

Before you replace the lid it is important to do a final check on the electrics by comparing it to the wiring as indicated on the lid.

Power up system

1. Switch on main supply at DB board.
2. Then switch on power at isolator switch.

DISPLAY

The display is the feedback mechanism to the user and displays important information about the solar system or electric geyser.

It displays the following:

Geyser temperature.

LDR reading (press up and down arrows simultaneously once). In case of Pumped solar system only.

Day of the week.

Real time clock.

Element on/off indicator.

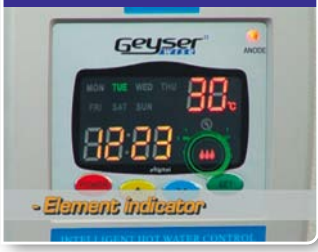

Timers.

Error messages.

DC Indicater

Adjusting the day of the week

To adjust the day of the week, follow the steps below:

1 Press the green set button until the day of the week flashes.

2 Adjust the day of the week by using the ∧ and ∨ arrow buttons.

Adjusting the real time clock

To adjust the real time clock follow the steps below:

1 Press the green set button until the time flashes.

2 And set the hours to your requirement. Press the green set button immediately after setting the hours to get to the minute counter. Set the minutes according to your requirements by using the ∧ and ∨ arrow keys.

Maximum temperature settings

There are four maximum temperature settings. It is important to note that these settings apply to the four quarters of the day and not to the set times that the elements must come on.

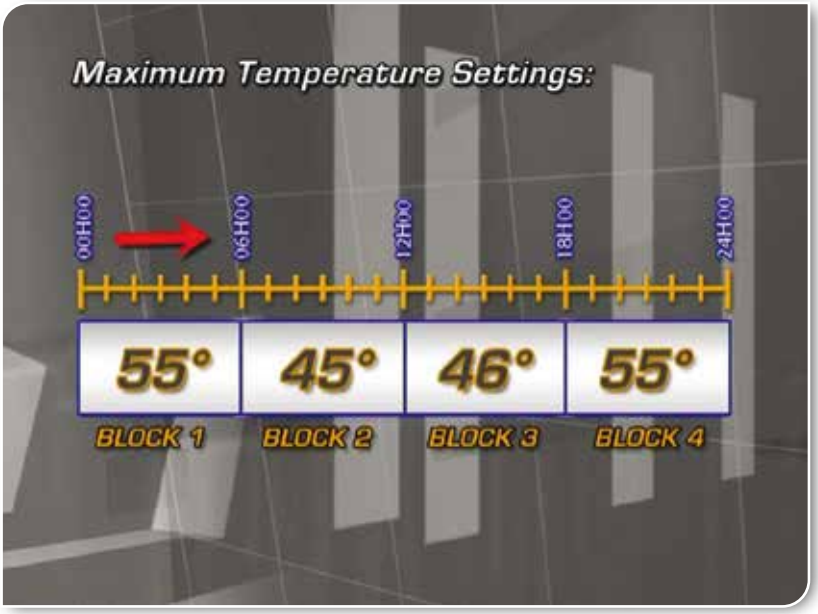

1. To adjust the maximum temperature settings, press the green set button until the first block temperature setting is displayed. The temperature will be flashing and the number of the block will be displayed in the timer indicator block. The below screens show the temperature flashing in block number 1.

2. Set the temperature per block to user requirements by using ∧ and ∨ arrow keys.

Setting LDR reading

1

Press the green set button until three digits display in the temperature display.

2

Set the LDR reading to your requirements using the **v** and **∧** arrow keys. Available readings 150 - 200.

Setting DC temperature

1

To adjust the DC maximum temperature setting, press the green set button five times. The DC temperature and word "on" will flash on the screen. Use the **∧** and **v** buttons to adjust the temperature.

Setting geyser element timers

There are four on/off timers that can be set with the GeyserWise. Note that you can set different timers for the weekend.

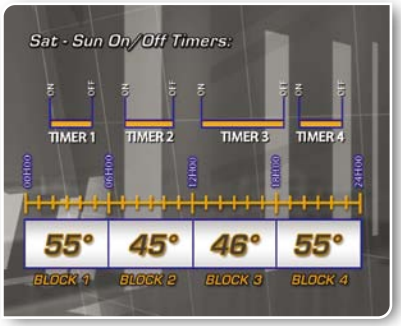

To set timer number one, follow the steps as indicated below:

1 Press the green set button until the timer indicators and Monday to Friday flashes. The below picture shows that you are at the Monday to Friday setting for timer number 1 on.

To get to the weekend timer setting press the green set button until the timer indicators and Saturday and Sunday flashes.

2 Adjust the hours you require by using the **Λ** and **V** buttons. Immediately press the green set button again to get to the minutes and use the **Λ** and **V** buttons to adjust the minutes.

3 To set the number 1 off timer, press the green set button until the timer indicators and Monday to Friday flashes. The below picture shows that you are at the Monday to Friday setting for timer number 1 off.

4 Adjust the hours you require by using the **Λ** and **V** buttons. Immediately press the green set button again to get to the minutes and use the **Λ** and **V** buttons to adjust the minutes.

Follow the same steps as above for timer 2, 3 and 4.

Eliminating a timer

It is possible to eliminate a timer setting. To eliminate a setting follow the below steps:

- Press the down arrow button until the timer setting reaches 00:00.
- Press the down arrow once more to eliminate until --:-- is displayed.

Follow the steps on page 41 with on and off setting.

Element indicator

The element indicator shows the user when the element is switched on.

When the element indicator is on, it means that the element is switched on.

When the element indicator is flashing, it means the water has reached the maximum temperature setting and the water will be allowed to cool down 6°C at which time the element switches back again.

Hour counter

The number of hours that the element was on can be counted. If the user pushes the up and down arrows simultaneously and keep them in for 6 seconds, the number of hours will be displayed.

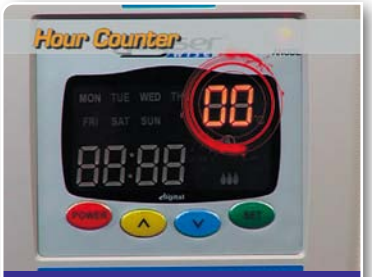

For example: Let's say the hour indicator indicates 30 hours. You then multiply the number of hours with your geyser element rating, e.g. 4 kW. This then means that the user consumed 120 kWh since the last time the unit was reset.

To reset the hour counter, keep the up and down arrow buttons in simultaneously until the main time settings reappear.

ERROR CODES - SUMMARY

The error codes indicate various problems and warnings. Therefore these require actions from the installer.

Error code: E00 - When two middle buttons pressed together

Possible cause:
LDR Sensor not connected

Action(s):
Check the LDR sensor

Error code: E1 - Earth leakage

Possible cause:
Faulty element or earth leakage (more sensitive than normal household earth leakage).

Action(s):
Element needs to be replaced - contact our office or qualified person to replace the element.
(More information on page 21)

Error code: E2 -Dry burn protection

Possible cause:
Empty cylinder
Thermal pocket too close to element

Action(s):
Check all water connections to the geyser
(More information on page 21)

Error code: E3 - Sensor failure water geyser

Possible cause:
The sensor could be damaged or there is a connection problem

Action(s):
Replace sensor
Check electrical connections and/or plug in control unit (More information on page 7)

Error code: E4 - Heating loss

Possible causes:
- Leaking hot water pipe
- Faulty valve
- Scale build up
- No power supply to the element
- Reversed thermosiphoning
- Faulty heating element

Action(s):
Check all of the above
(More information on page 22)

Error code: E5 - Over temperature protection

Possible cause:
Geyser temperature exceeds 85°C

Action(s):
Open hot water tap to reduce temperature in geyser
(More information on page 23)

Error code: E6 - Water leak

Possible causes:
- Leaking geyser
- Valves leaking
- Overflow leaking

Action(s):
Check all connections
(More information on page 23)

Error code: E7 - Communications failure

Possible cause:
Poor contact or damaged cable

Action(s):
Check communications wire between control box and display unit (More information on page 23)

E00 Error code: When two middle buttons pressed together

When two middle buttons are pressed LDR sensor not connected.

Possible cause

LDR Sensor not connected.

Remedial action

Connect LDR sensor.

CONNECTION OF MPPT CONTROLLER

What is MPPT and how does it work?

MPPT stands for Maximum Power Point Tracking, and it relates to the solar cell itself. Each solar cell has a point at which the current (I) and voltage (V) output from the cell result in the maximum power output of the cell. In the diagram below the curve is an example of the standard output expected from a solar cell, the Maximum Power Point is at the position marked on the diagram.

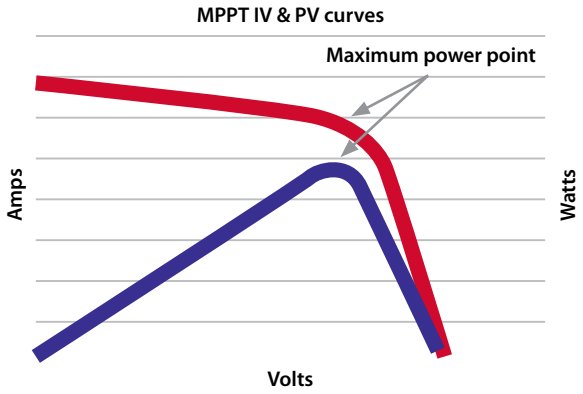

How is this done?

A Maximum Power Point Tracking solar regulator will simulate the load required by the solar panel to achieve the maximum power from the cell. The regulator will work out at which point the cell will output the maximum power and derive from this the voltage and current outputs required for maximum power to be achieved. It will then calculate the load that it must simulate based on these voltage and current levels R=V/I. The regulator, now receiving the maximum amount of power in, will then regulate the output according to what it is designed for.

So in layman's terms, how does MPPT benefit me?

MPPT ensures that you get the most power possible from your solar panels at any point in time. It is particularly effective during low light level conditions. These calculations result in an output that delivers maximum current at the required voltage at any point in time. During low light level situations it will compensate for the low light level and find the new point at which the solar cell delivers its maximum power output.

Connection Diagramme

Geyserwise MPPT Controller (Ensure that 4mm Solar Cable is used) (Use Cables as Supplied)

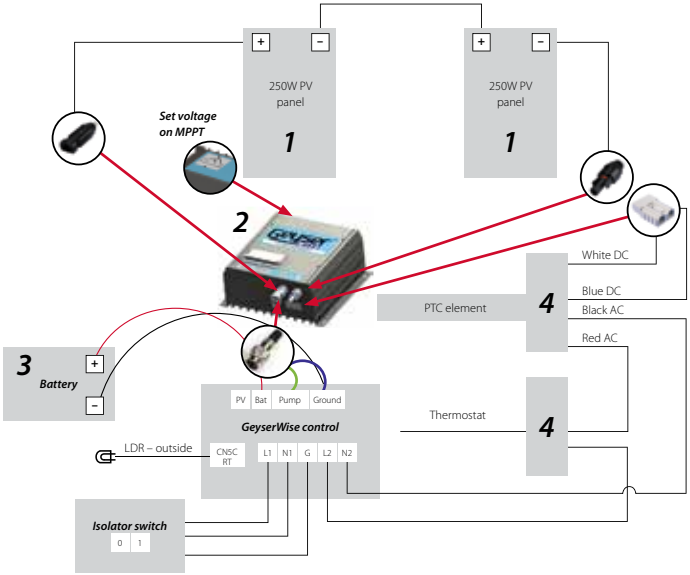

IMPORTANT:
Ensure that the circuit breaker is off when making connections. Once all connections are made switch the circuit breaker on.

Setting Voltages on MPPT

Use the key supplied to adjust the voltages on the MPPT

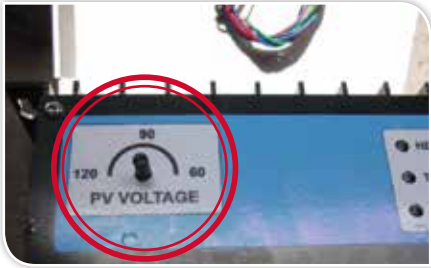

MPPT setting

100L: Set at 65V (2 x 250W panels in series)

150L: Set at 100V (3 x 250W panels in series)

200L: Set at 110V (3 x 300W panels in series)

Adjust the pod until the heating light comes on.

Expected multi-meter Readings

DC Voltage from PV Panels

DC Current Amps to Element

DC Current Amps to Element PV

All equipment must be installed inside or inside an appropriate water proof box.

Please take all voltage and ampere readings before leaving the installation site. If you are unsure as to what the values should be for your particular installation please contact our office for advice.

NOTES

GeyserWise cc • ***members*** *Nicolene Fourie, Jacque Fourie, Cecile Fourie, Elizabeth Louise Fourie*

CAPE TOWN
postal address *Post Net, Private Bag X103, Suite 239, N1 City, 7463* • ***physical address*** *151 Cook Street, Goodwood, 7460, Western Cape*
tel *086 104 3973* • ***fax*** *086 664 3973*

PRETORIA
physical address *Unit 5 Edison Park, 183 Edison Crescent, Hennops Park, Centurion, 0172*
tel *012 653 1020*

email *info@geyserwise.co.za* • ***web*** *www.geyserwise.co.za* • ***reg no*** *2004/083059/23* • ***VAT no*** *4550224515*

0176